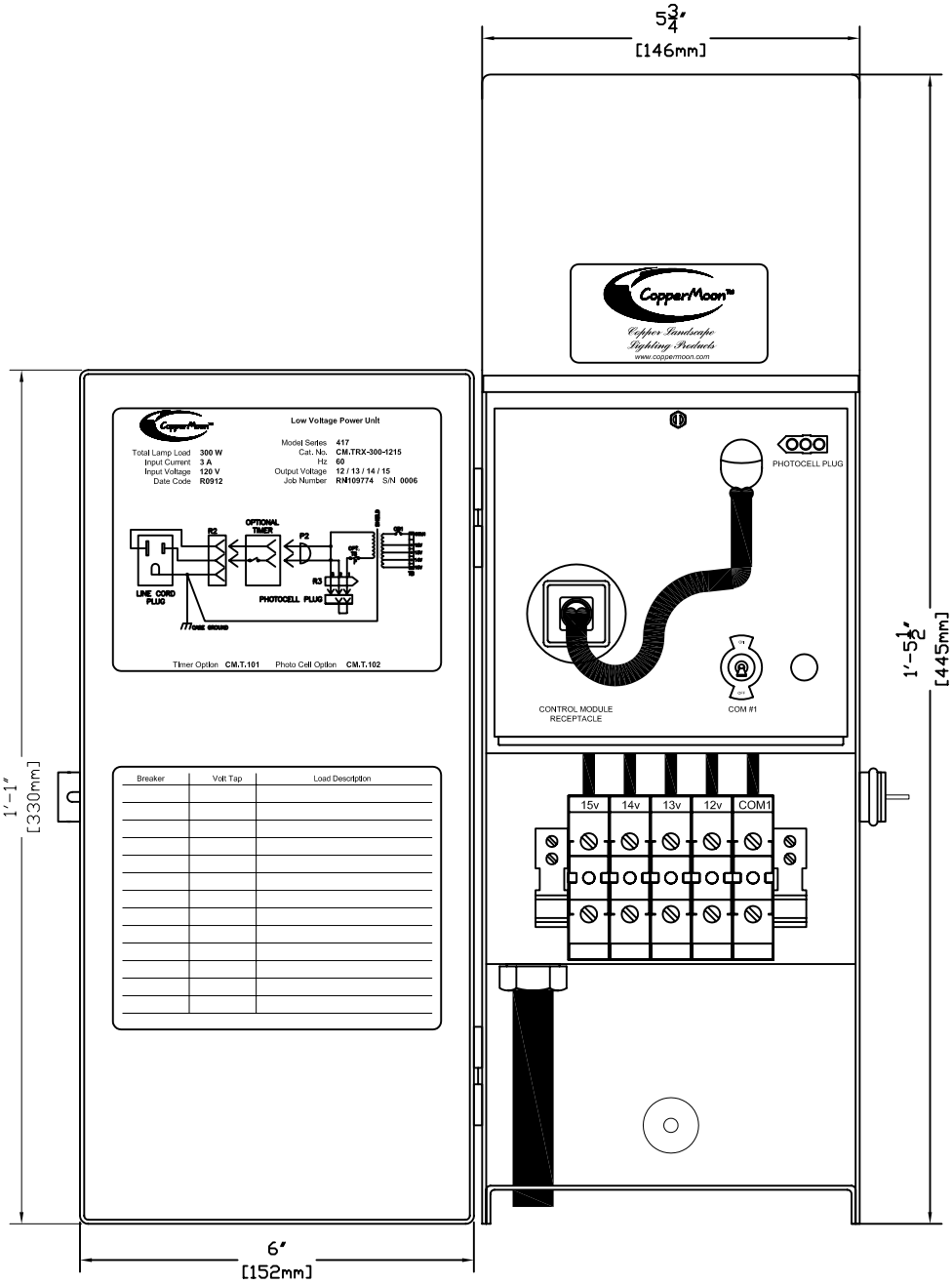

FRONT VIEW WITH DOOR OPEN

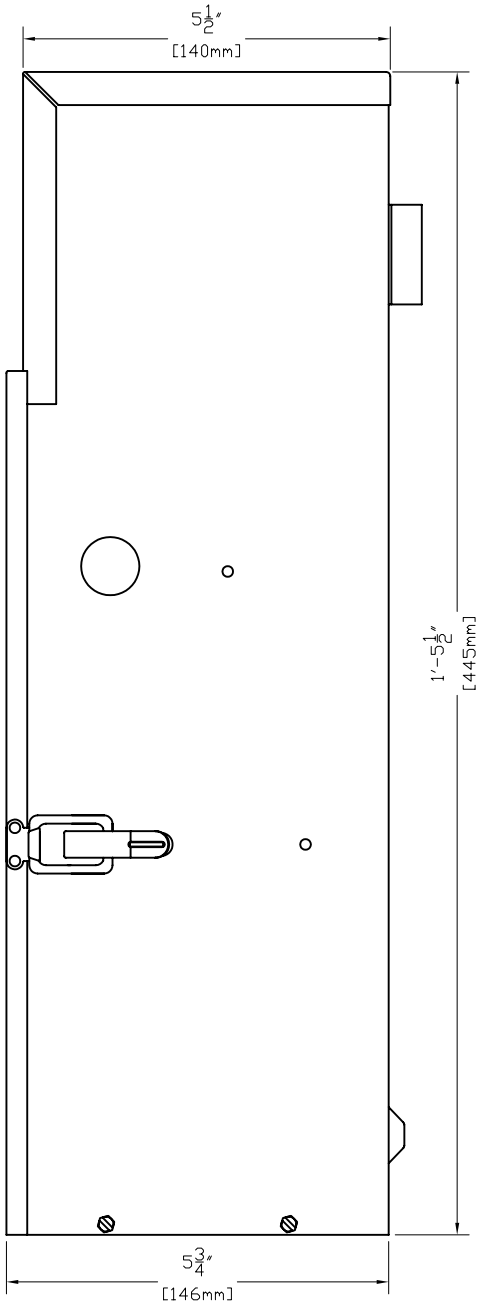

SIDE VIEW

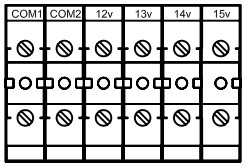

600 - 1215 TERMINAL BLOCK

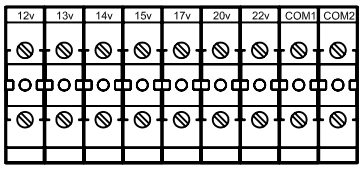

600 - 1222 TERMINAL BLOCK

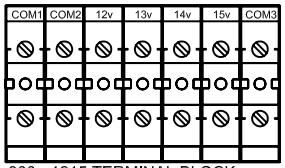

900 - 1215 TERMINAL BLOCK

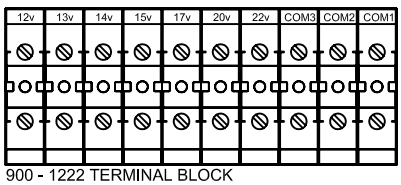

900 - 1222 TERMINAL BLOCK

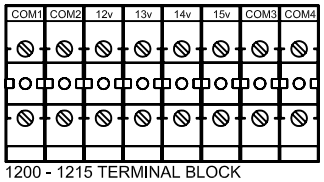

1200 - 1215 TERMINAL BLOCK

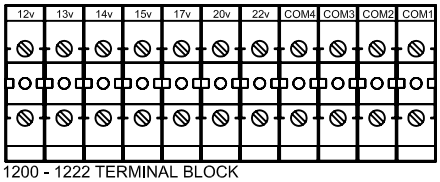

1200 - 1222 TERMINAL BLOCK

TERMINAL BLOCK DETAIL

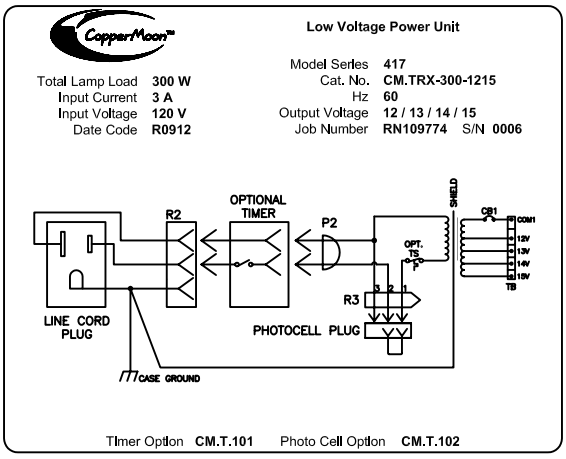

ELECTRICAL ONE-LINE DETAIL

CopperMoon™
901 3rd AVE.
WEST POINT, GA. 31833
1.800.727.5483
www.coppermoon.com

CopperMoon TRANSFORMERS
CM-TRX 300-1215

SIZE	DRAWN BY:	CLASSIFICATION:	DATE:
A	CRAIG SANDERS	TRANSFORMERS	FEB. 02, 2010